SCANIA ICD (Individual Chassis Drawing)

0 1000

ICD No	ICD-ordering date	E-mail address	Cad scale	Proj metod
2019948	2025-12-18	icd-ics.support@scania.com	1:1	
Factory order No	Chassis No	Chassis type		
1782364-1	5806892	R 590 B8x4x4NB	SCANIA	

Weight Information
TOTAL : 10962 kg
FRONT : 5963 kg
REAR : 4999 kg

NOTE: Chassis is drawn and height dimensions are given at max technical axle weight. Height dimensions within brackets apply to chassis weight. Tolerance on height dimensions related to ground is +/- 25 mm. Other dimensions are nominal unless stated otherwise. For further information see "Chassis dimensions" on Scania Truck Bodybuilder Homepage.

NOTE: This drawing has FFU-order/-s (Fit For Use) that may influence the dimensions/components. Please contact your local dealer for more information.

TTC = Theoretical Tilt Center

CO =3579
H060 =250.00
R062 =3329.00
L061 =2983.00
L062 =1300.00

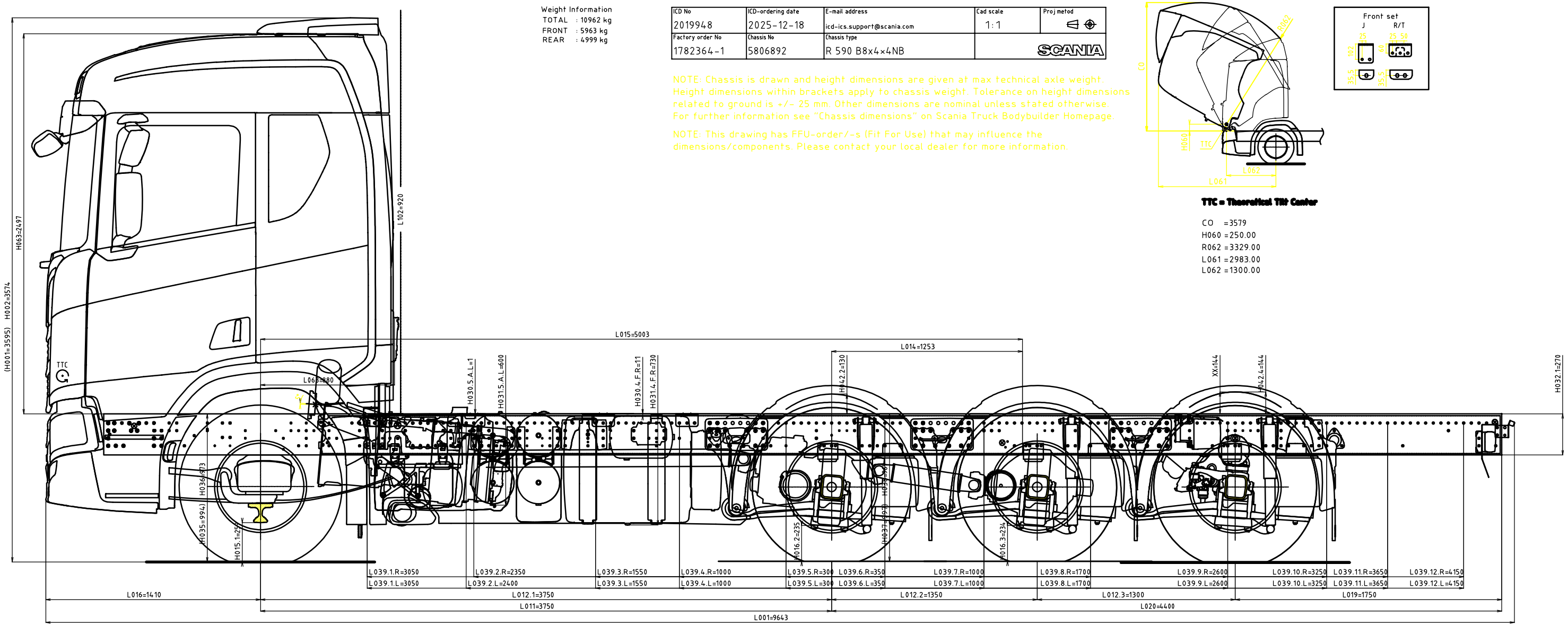

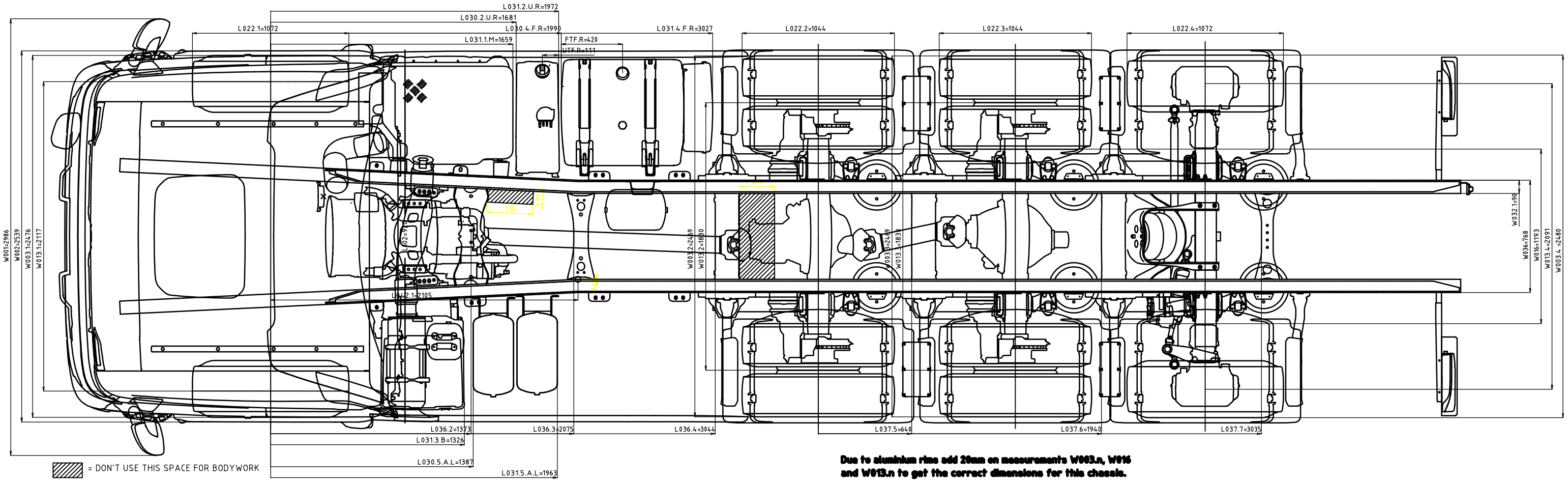

= DON'T USE THIS SPACE FOR BODYWORK

Due to aluminium rims add 20mm on measurements W003.n, W016 and W013.n to get the correct dimensions for this chassis.